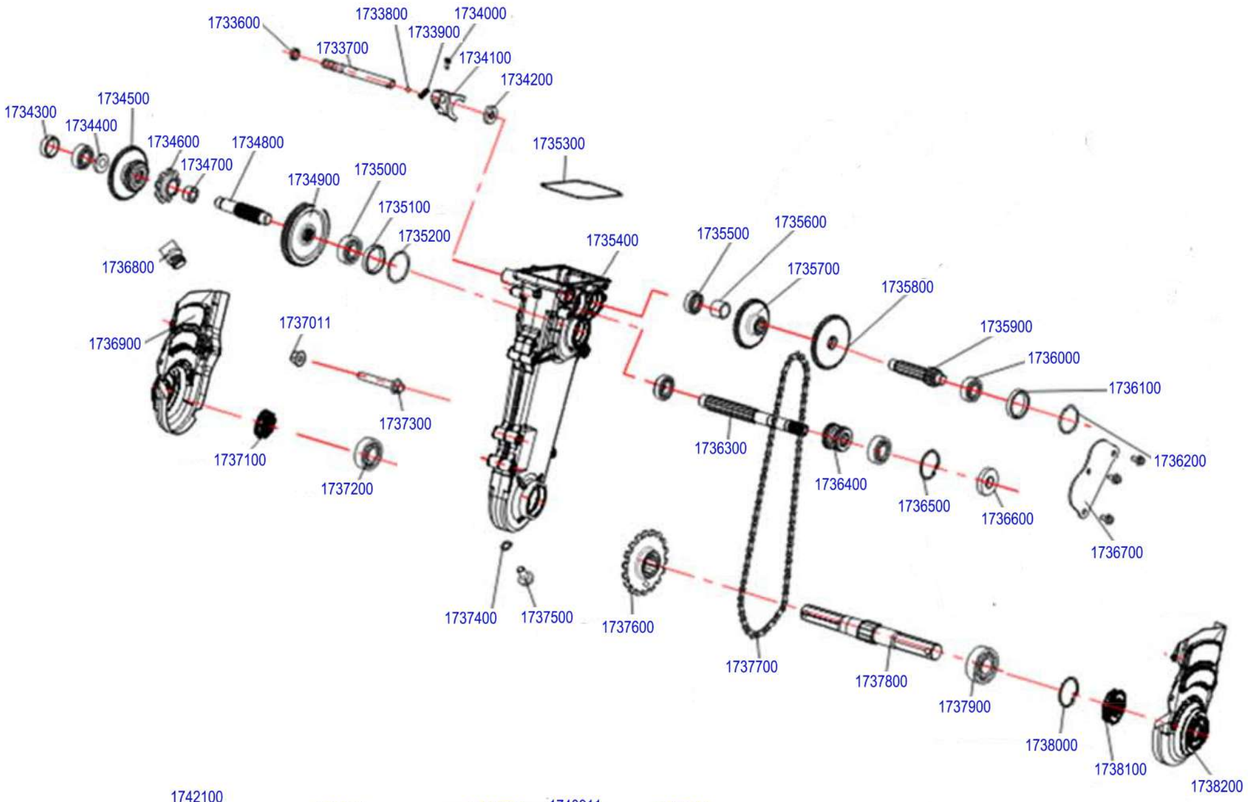

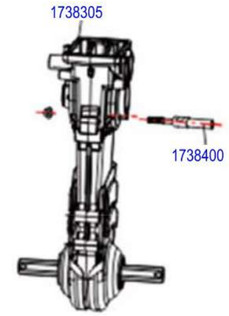

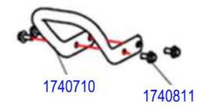

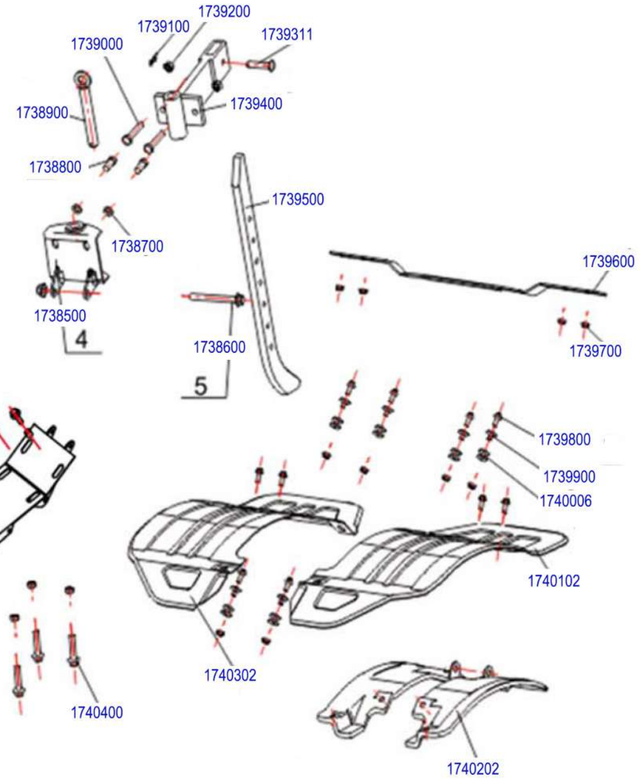

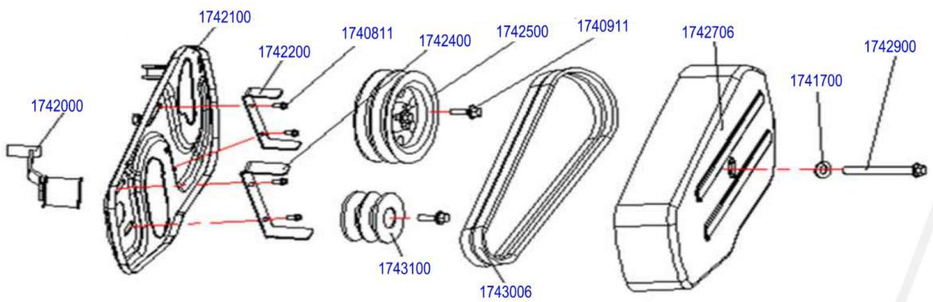

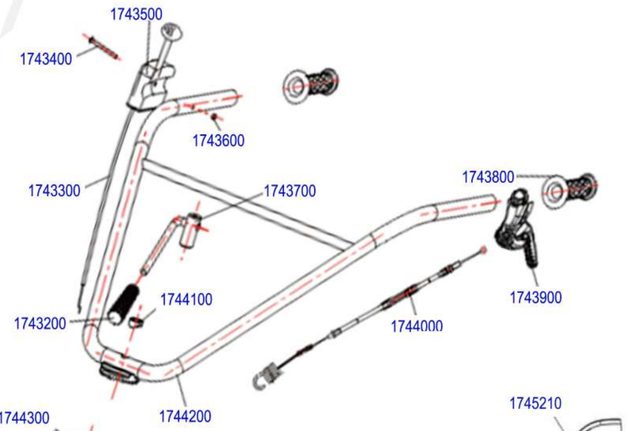

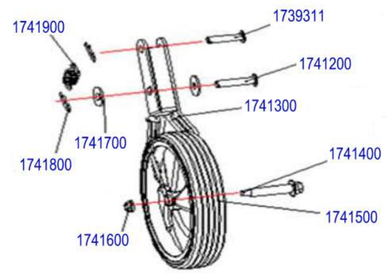

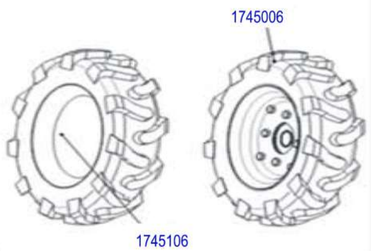

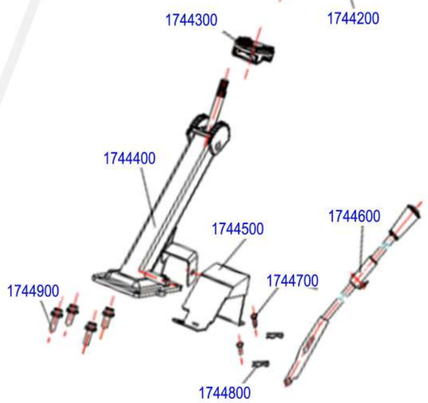

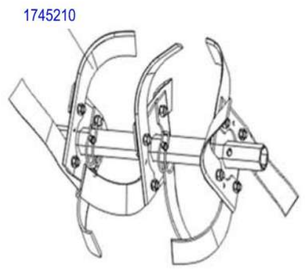

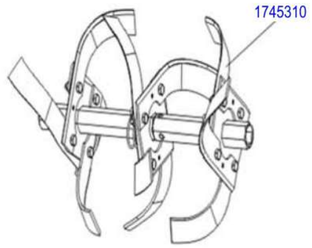

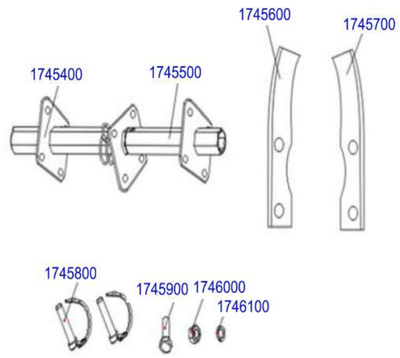

LE42212-105DW21 (2018.12.11)