EXPLODED PARTS LIST

Year: 2020

VTB 842 Prime

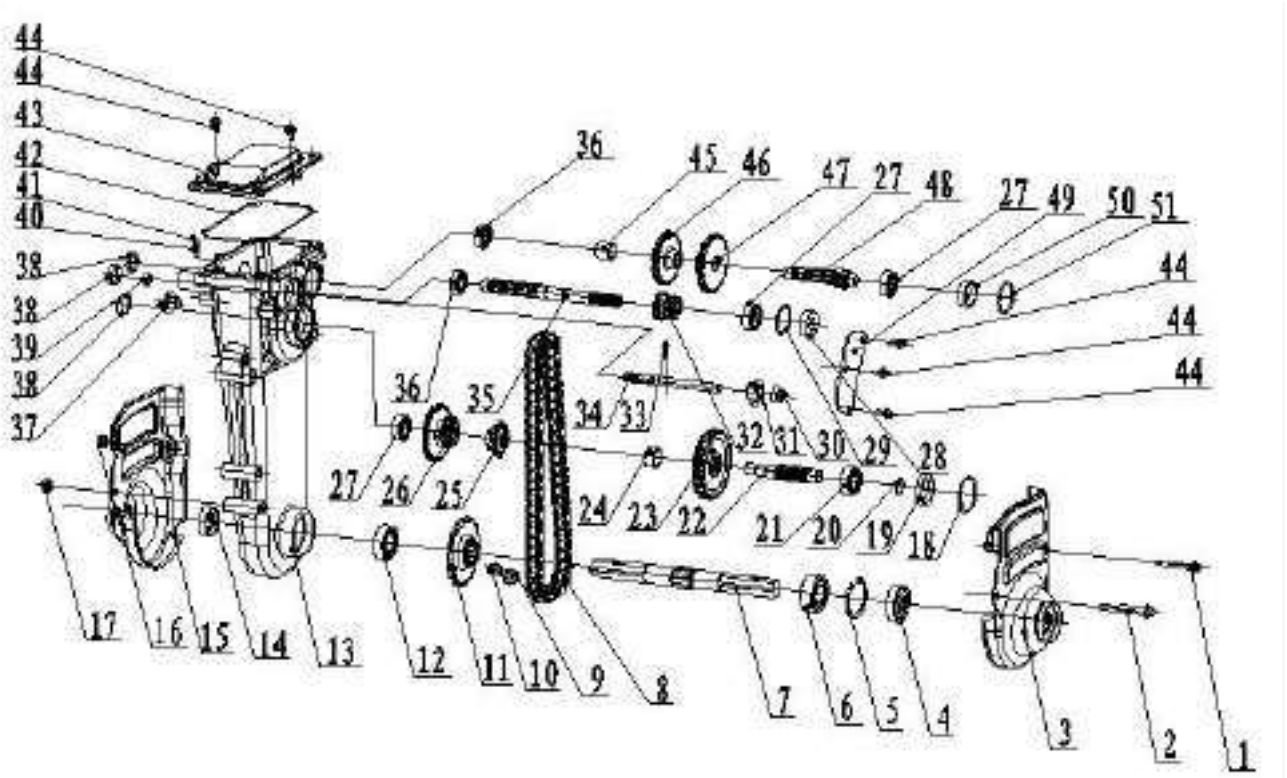

No	Code	Name	Qty	No	Code	Name	Qty
1		HEXAGON FLANGE BOLT M6×45	1	27		Bearing 6202	3
2		HEXAGON FLANGE BOLT M8x60	1	28	40131	OIL SEALϕ15×ϕ35×7	1
3	40137	LEFT SHIELD	1	29		CHECK RING 35	1
4	40138	OIL SEALϕ25×ϕ52×9	1	30	40130	OIL SEAL ϕ12×ϕ22×6	1
5		CHECK RING 52	1	31		SHIFTING SPRING	1
6		Bearing 6205	1	32	40124	TWO-THROW GEAR	1
7	40139	HEXAGON OUTPUT SHAFT	1	33		HEXAGON FLANGE BOLT M6×420	1
8	40125	CHAIN	1	34		SHIFT FORK SHAFT	1
9		HEXAGON FLANGE BOLT M10×1.25×12	1	35	40128	MAIN SHAFT	1
10		WASHER	1	36		BEARING 6002	2
11	40140	DRIVEN SPROCKET	1	37		OIL RULER	1
12		Bearing 6005	1	38		OIL PLUG (BIG)/ϕ28×ϕ24×6	3
13	40129	GEARBOX	1	39		OIL PLUG (SMALL)/ϕ16×ϕ13.5×5.5	1
14	40142	OIL SEALϕ25×ϕ41×9	1	40		SHIFTING SPRING/ϕ1×ϕ6×20	1
15	40143	RIGHT SHIELD	1	41		STEEL BALLϕ6.3	1
16		HEXAGON FLANGE NUT M6	1	42		SEALING RING	1
17		HEXAGON FLANGE NUT M8	1	43		GEAR BOX COVER	1
18		O-RING ϕ45×2.65	1	44		HEXAGON FLANGE BOLT M6×12	5
19		STOP RING Ⅱ ϕ36×ϕ41×7	1	45		SHAFT HOUSING ϕ18.5×ϕ23×18	1
20		WASHERϕ17.5×ϕ26×1.0	1	46	40126	COUNTER SHAFT GEAR TWO	1
21		Bearing 6203	1	47	40122	COUNTER SHAFT GEAR ONE	1
22	40119	DRIVING SHAFT	1	48	40120	COUNTER SHAFT	1
23	40127	DRIVING GEAR	1	49		OIL STOPPER	1
24		SHAFT HOUSING Ⅱ ϕ20.5×ϕ26×11	1	50		STOP RING I	1
25	40123	DRIVING SPROCKET	1	51		O-RING 40×2.65	1
26	40121	REVERSE TWO-THROW GEAR	1				

GEARBOX

EXPLODED PARTS LIST

Year: 2020

VTB 842 Prime

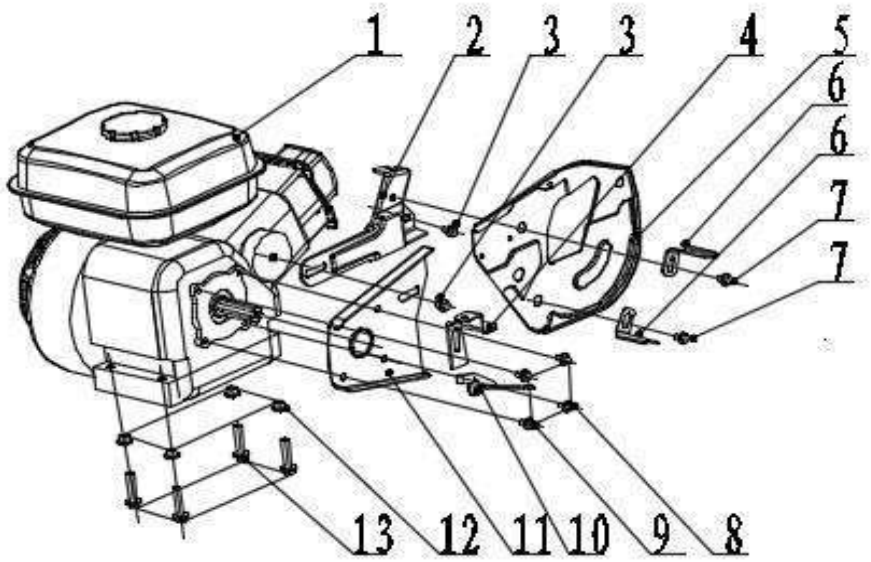

No	Code	Name	Qty	No	Code	Name	Qty
1	64790	GASOLIEN ENGINE	1				
2	64795	TENSIONER SUPPORT	1				
3		HEXAGON FLANGE BOLT M8×12	2				
4	64796	TENSIONER PLATE A	1				
5	64797	Driven pulley floor	1				
6	64798	TENSIONER PLATE C	2				
7		HEXAGON FLANGE BOLT M6×12	2				
8		HEXAGON FLANGE BOLT M8×16	2				
9		HEXAGON FLANGE BOLT M8×12	2				
10	64799	TENSIONER PLATE B	1				
11	64800	DRIVING PULLEY PLATE	1				
12		HEXAGON FLANGE NUT M8	4				
13		HEXAGON FLANGE BOLT M8×35	4				

ENGINE SUPPORT FRAME

EXPLODED PARTS LIST

Year: 2020

VTB 842 Prime

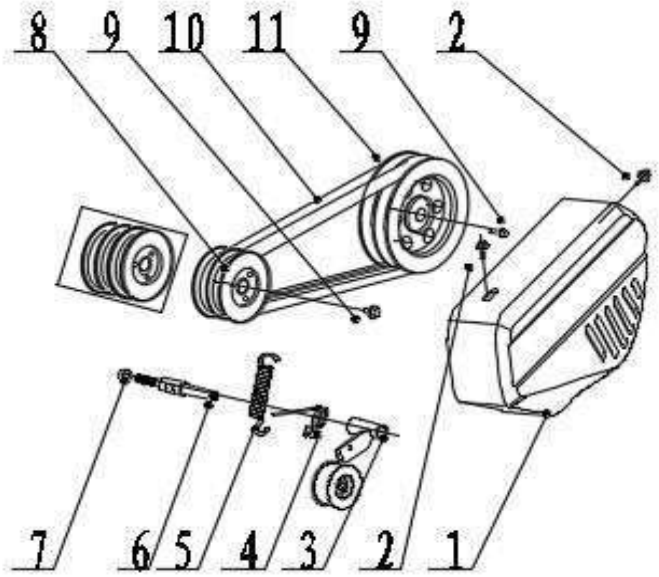

No	Code	Name	Qty	No	Code	Name	Qty
1	64801	BELT COVER	1				
2		HEXAGON FLANGE BOLT M6x10	2				
3	64802	TENSION PULLEY COMPONENTS	1				
4	64803	TENSIONER RETURN SPRING	1				
5	64804	TENSIONER SPRING	1				
6	64805	TENSION WHEEL CORE SHAFT	1				
7		HEXAGON FLANGE NUT M8	1				
8	64806	DRIVING PULLEY ASSY	1				
9		HEXAGON FLANGE BOLT M8x20	2				
10	64807	V BELT	2				
11	64808	DRIVEN PULLEY ASSY	1				

BELT COVER

EXPLODED PARTS LIST

Year: 2020

VTB 842 Prime

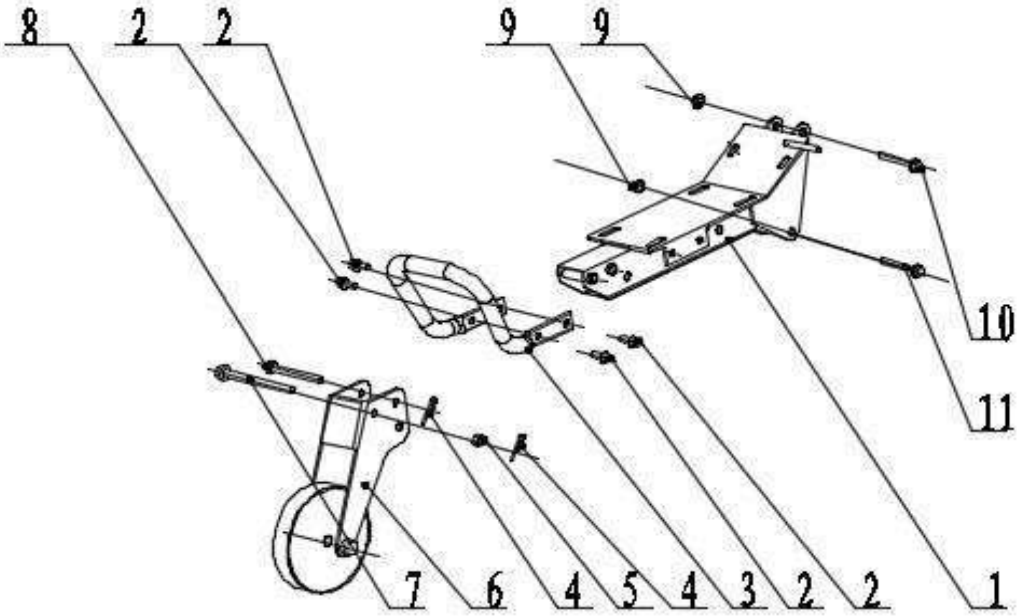

No	Code	Name	Qty	No	Code	Name	Qty
1	64809	ENGINE SUPPORT	1				
2		HEXAGON FLANGE BOLT M8x16	4				
3	64810	BUMPER	1				
4	64811	ϕ2x25	2				
5		Slotted nut m10	1				
6	64812	FRONT WHEEL	1				
7		HEXAGON FLANGE BOLTM10×85	1				
8		B PIN 10×70	1				
9		HEXAGON FLANGE NUT M8	2				
10		HEXAGON FLANGE BOLT M8x65	1				
11		HEXAGON FLANGE BOLT M8x60	1				

FRONT WHEEL

EXPLODED PARTS LIST

Year: 2020

VTB 842 Prime

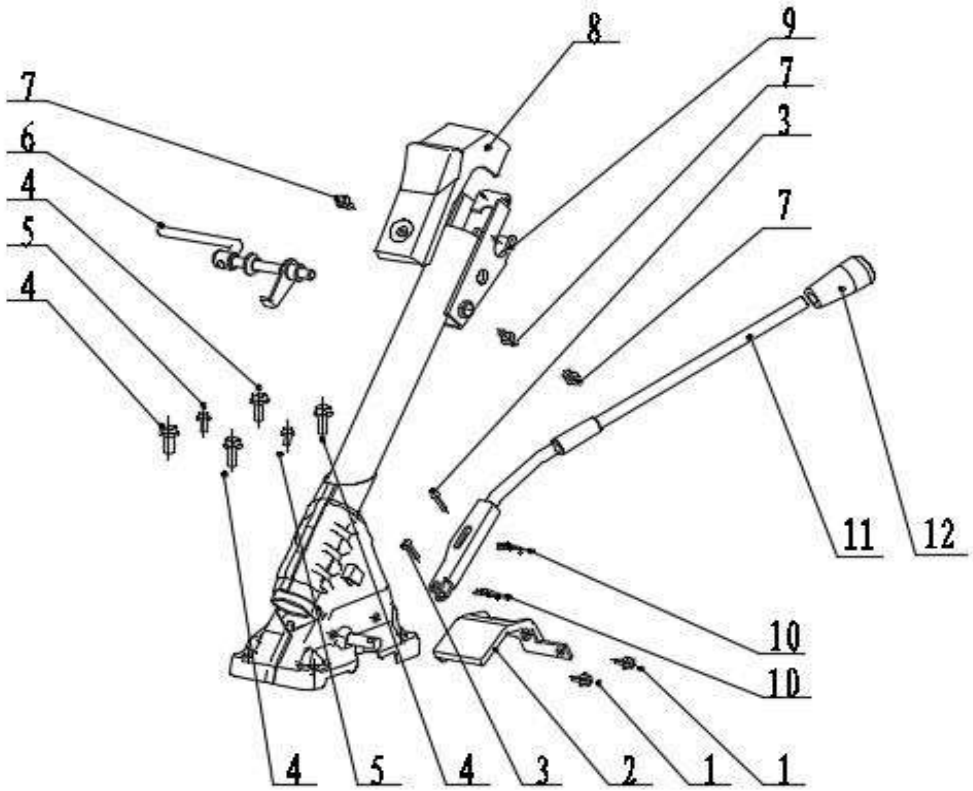

No	Code	Name	Qty	No	Code	Name	Qty
1		HEXAGON FLANGE BOLT M6×12	2				
2	64813	SHIFT ENCLOSER	1				
3		PIN 5×24	2				
4		HEXAGON FLANGE BOLT M8 × 20	4				
5		HEXAGONAL FLANGE NUT M6 × 16	2				
6	64814	LOCK HANDLE PARTS	1				
7		CROSS RECESSED TAPPING SCREW ST5 × 10	3				
8	64815	ARMREST COVER	1				
9	64816	HANDRAIL SEAT	1				
10		R PIN Φ 1.2 × 6 × 27	2				
11	64817	SHIFT LEVER ASSEMBLY	1				
12	64818	SHIFT ROD RUBBER SLEEVE	1				

HANDLE ARMREST

EXPLODED PARTS LIST

Year: 2020

VTB 842 Prime

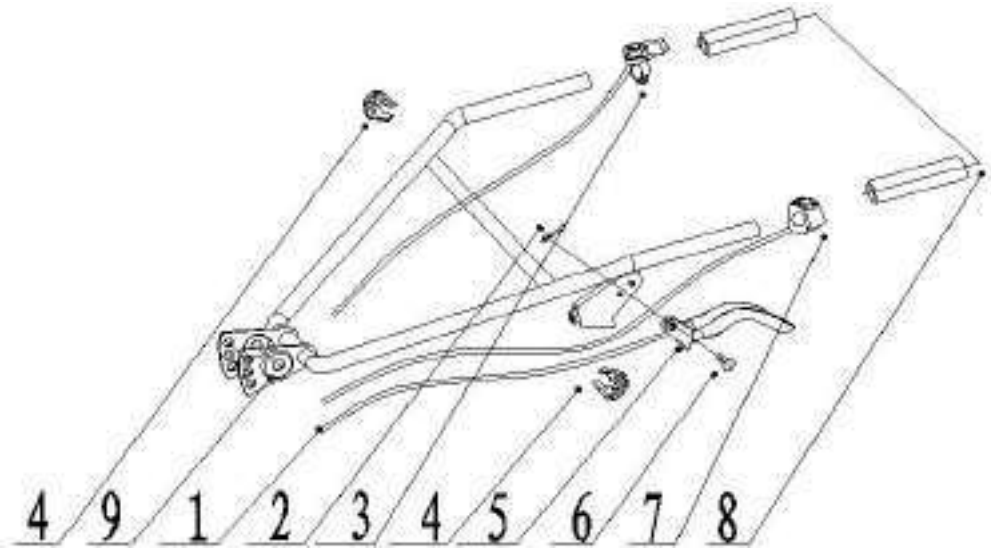

No	Code	Name	Qty	No	Code	Name	Qty
1	64819	CLUTCH LINE	1				
2	64820	PIN 2X20	1				
3		THROTTLE SWITCH ASSEMBLY	1				
4	64821	LINE CARD	2				
5	64822	CLUTCH HANDLE	1				
6	64823	PIN 8 X 25	1				
7	64824	FLAMEOUT SWITCH LINE	1				
8	64825	HANDRAIL RUBBER SLEEVE	2				
9	64826	HANDLE	1				

HANDLE BAR

EXPLODED PARTS LIST

Year: 2020

VTB 842 Prime

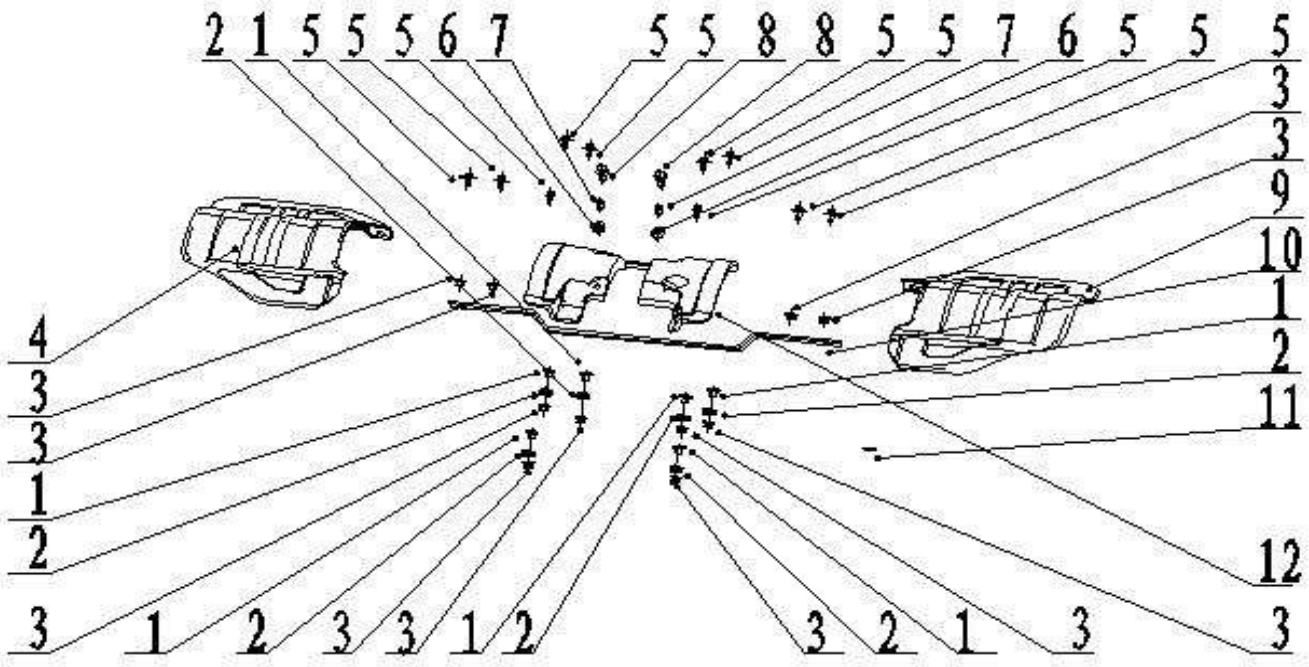

No	Code	Name	Qty	No	Code	Name	Qty
1	64827	FENDER BUSHING	6				
2	64828	FENDER PLUG	6				
3		HEXAGONAL FLANGE NUT M6	10				
4	64829	LEFT MAIN FENDER	1				
5		HEXAGON FLANGE BOLT M6 × 20	10				
6		HEXAGONAL FLANGE NUT M8	2				
7	64830	INNER FENDER BUSHING	2				
8		HEXAGON FLANGE BOLT M8 × 25	2				
9	64831	RIGHT MAIN FENDER	1				
10	64832	FENDER REAR SUPPORT	1				
11		CIRCULAR PAPER PAD Φ6	10				
12	64833	INNER FENDER	1				

MUD-FENDER

EXPLODED PARTS LIST

Year: 2020

VTB 842 Prime

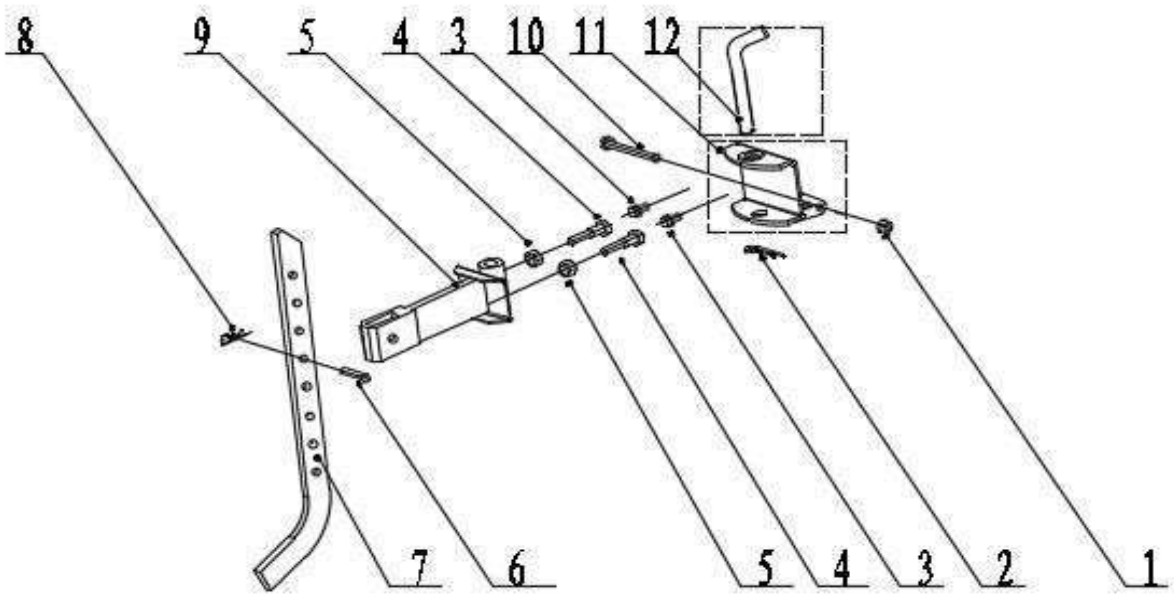

No	Code	Name	Qty	No	Code	Name	Qty
1		HEXAGON FLANGE NUT M10	1				
2	64834	βPIN ϕ3×20×60	1				
3		HEXAGON FLANGE BOLT M8×20	2				
4		HEXAGON FLANGE BOLT M12×50	2				
5		HEXAGON FLANGE NUT M12	2				
6		B PIN 10×40	1				
7	64835	RESISTANCE BAR	1				
8	64836	βPIN ϕ2×9×38	1				
9	64837	CONNECTOR	1				
10		HEXAGON FLANGE BOLT M10×85	1				
11	64838	PULLEY COSRP	1				
12	64839	THUMBLOCK	1				

TRAILER BODY PART

EXPLODED PARTS LIST

Year: 2020

VTB 842 Prime

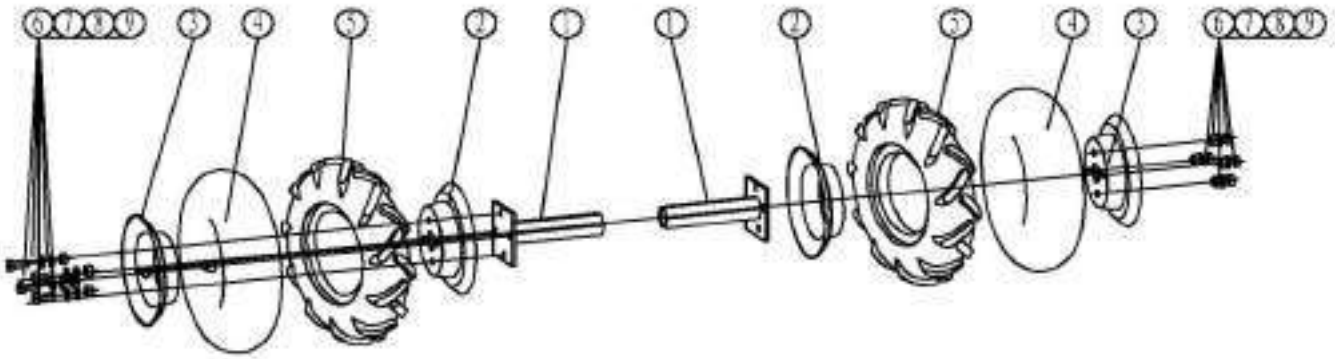

No	Code	Name	Qty	No	Code	Name	Qty
1	64840	WHEEL SHAFT	2				
2	64841	INSIDE WHEEL HUB	2				
3	64842	OUTSIDE WHEEL HUB	2				
4	64843	INNER TUBE	2				
5	64844	OUTTER TUBE	2				
6	64845	BOLT	8				
7	64846	SPRING WASHER	8				
8	64847	PLAT WASHER	8				
9	64848	NUT	8				

4.00-8 WHEEL

EXPLODED PARTS LIST

Year: 2020

VTB 842 Prime

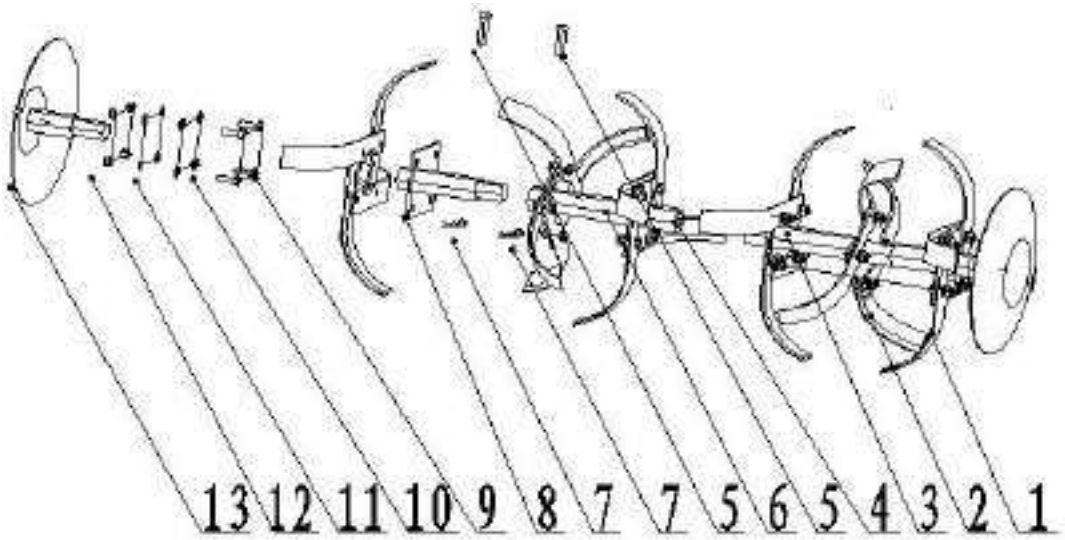

No	Code	Name	Qty	No	Code	Name	Qty
1	64849	LEFT BLADE	12				
2	64850	RIGHT BLADE	12				
3	64851	LEFT BLADES ASSY	1				
4	64852	RIGHT BLADE ASSY	1				
5	64853	B PIN 8X40	4				
6	64854	MAIN BLADE CYLINDER	2				
7	64836	βPIN ϕ2×9×38	4				
8	64855	VICE BLADE CYLINDER	2				
9	64856	HEXAGON FLANGE BOLT M8x25	24				
10	64857	FLAT WASHER 8	24				
11	64858	SPRING WASHER 8	24				
12	64859	HEXAGON FLANGE NUT M8	24				
13	64860	DISC	2				

BLADE SETS