EXPLODED PARTS LIST

Year: 2018

WP 60 P (VGR 250H-Engine)

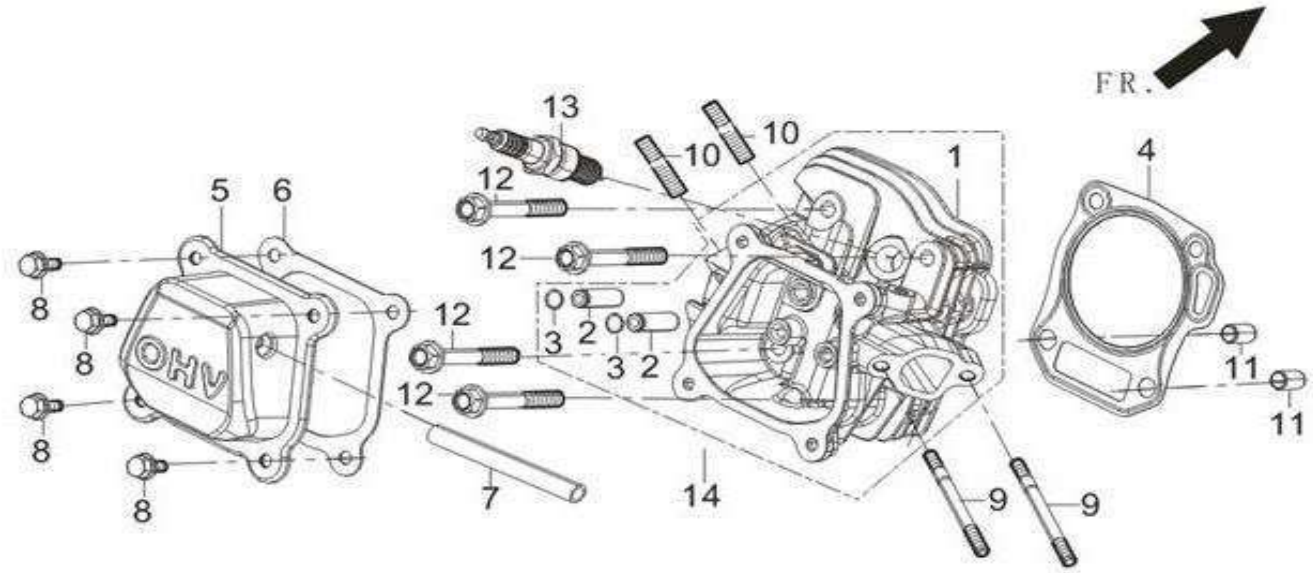

No	Code	Name	Qty	No	Code	Name	Qty
E01-4	044347	GASKET, CYLINDER HEAD	1				
E01-5	044356	COVER SUBASSEMBLY, CYLINDER HEAD	1				
E01-6	044357	GASKET, CYLINDER HEAD COVER	1				
E01-7		TUBE, BREATHER	1				
E01-8	044486	BOLT	4				
E01-9		STUD	2				
E01-10		STUD	2				
E01-11		PIN	2				
E01-12		BOLT, CYLINDER HEAD	4				
E01-13	044358	PLUG, SPARK	1				
E01-14	044359	HEAD SUBASSEMBLY, CYLINDER	1				

FIG.1 HEAD SUBASSEMBLY, CYLINDER / PLUG,SPARK (E01)

EXPLODED PARTS LIST

Year: 2018

WP 60 P (VGR 250H-Engine)

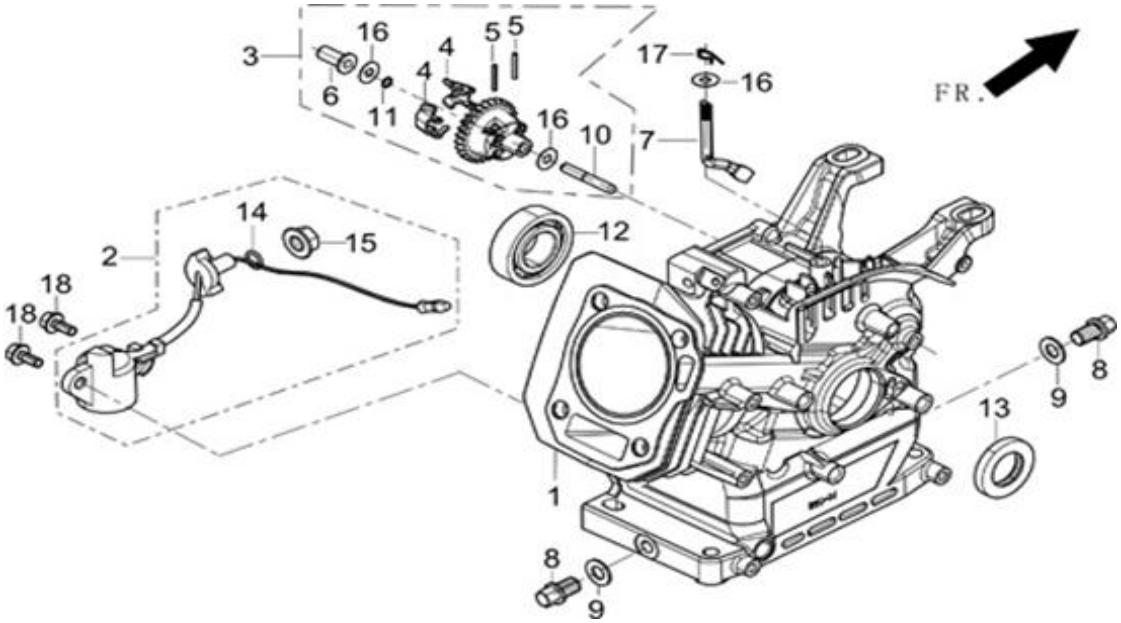

No	Code	Name	Qty	No	Code	Name	Qty
E02-1	044360	CRANKCASE SUBASSEMBLY.	1				
E02-2		SENSOR, ENGINE OIL	1				
E02-3	044361	GEAR ASSY, GOVERNOR	1				
E02-7		ARM, GOVERNOR	1				
E02-8		BOLT, DRAIN PLUG	2				
E02-9		WASHER	2				
E02-12		BEARING	1				
E02-13	044363	SEAL, OIL	1				
E02-15		NUT	1				
E02-16		WASHER	1				
E02-17		PIN	1				
E02-18		BOLT	2				

FIG.2 CRANKCASE. / GEAR ASSY, GOVERNOR.(E02)

EXPLODED PARTS LIST

Year: 2018

WP 60 P (VGR 250H-Engine)

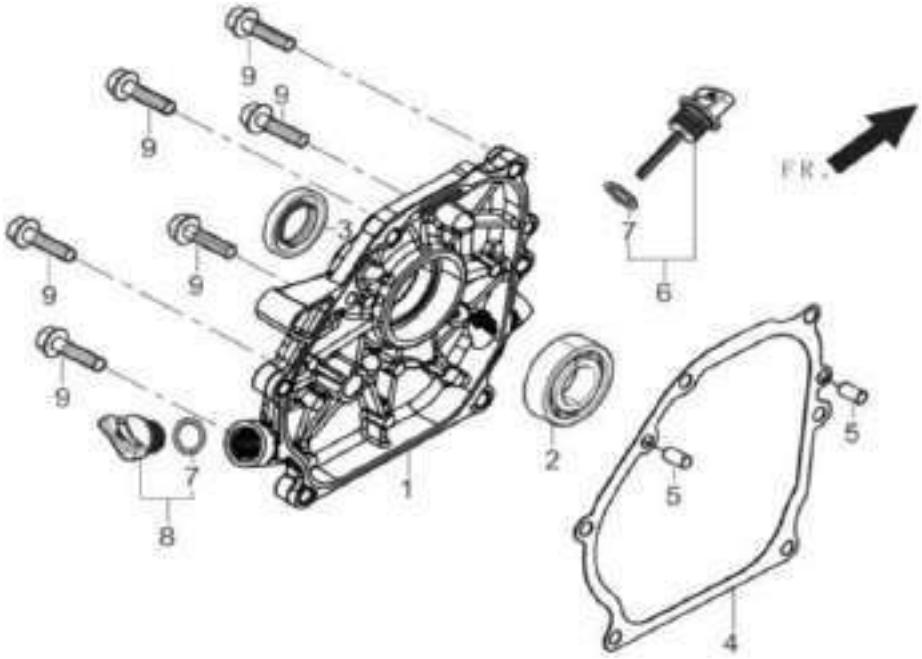

No	Code	Name	Qty	No	Code	Name	Qty
E03-1	044364	COVER, CRANKCASE	1				
E03-2		BEARING	1				
E03-3	044363	SEAL, OIL	1				
E03-4	044365	GASKET, CRANKCASE	1				
E03-5		PIN	2				
E03-6	044366	DIPSTICK SUBASSEMBLY, OIL	1				
E03-8	044367	PLUG SUBASSEMBLY, ENGINE OIL	1				
E03-9		BOLT	6				

FIG.3 COVER SUBASSEMBLY, CRANKCASE (E03)

EXPLODED PARTS LIST

Year: 2018

WP 60 P (VGR 250H-Engine)

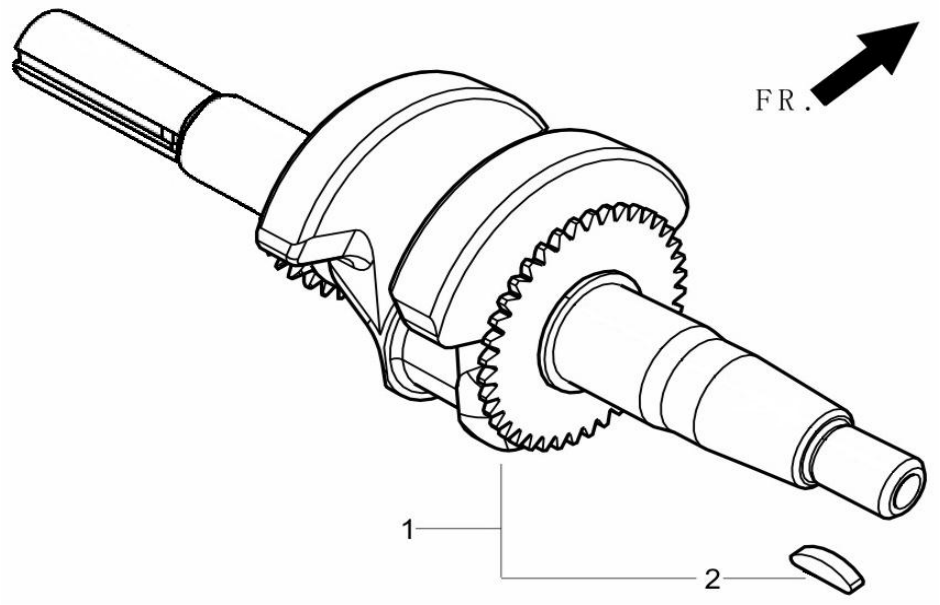

No	Code	Name	Qty	No	Code	Name	Qty
E04-1	044368	CRANKSHAFT ASSY.	1				

FIG.4 ROD,CRANKSHAFT CONNETING (E04)

EXPLODED PARTS LIST

Year: 2018

WP 60 P (VGR 250H-Engine)

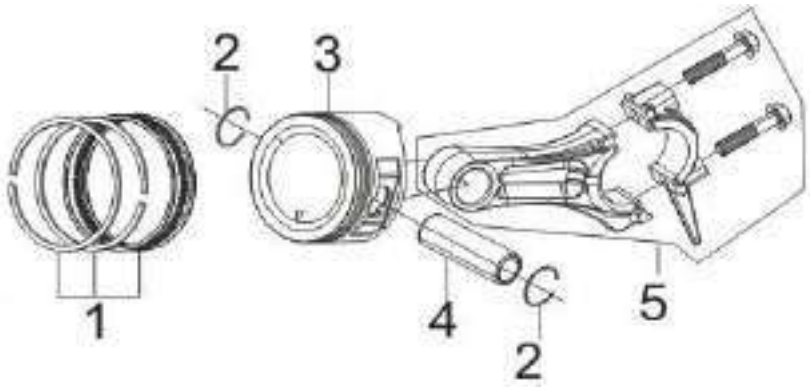

No	Code	Name	Qty	No	Code	Name	Qty
E05-1	044369	RING, THE FIRST	1				
E05-2	044370	CLIP, PISTON PIN	2				
E05-3	044371	PISTON ASSY.	1				
E05-4	044372	PIN, PISTON	1				
E05-5	044373	ROD, CONNECTING	1				

FIG.5 RING SET,OIL / ROD,CRANKSHAFT CONNETING （E05）

EXPLODED PARTS LIST

Year: 2018

WP 60 P (VGR 250H-Engine)

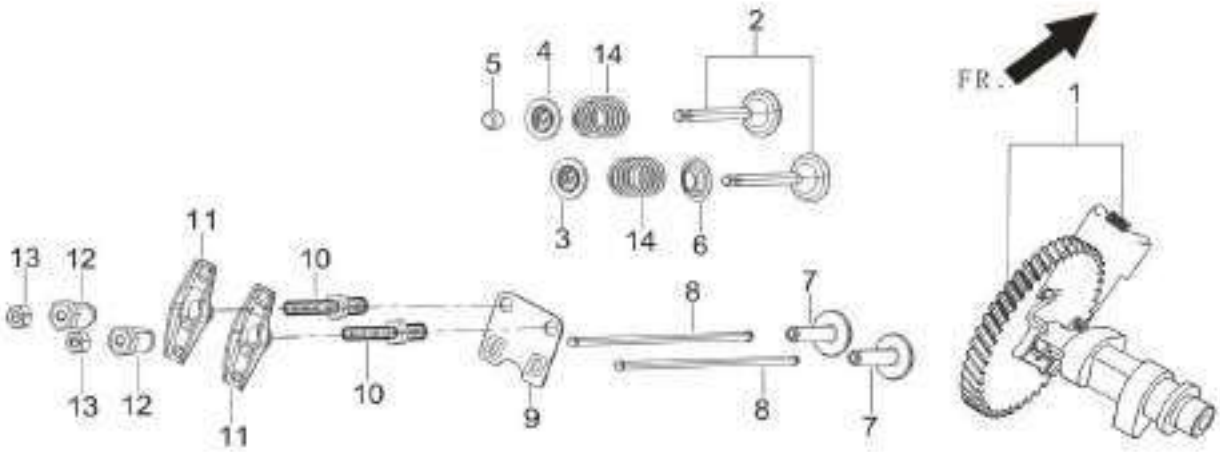

No	Code	Name	Qty	No	Code	Name	Qty
E06-1	044374	CAMSHAFT ASSY.	1				
E06-2	044375	VALVES SET	1				
E06-3	044376	SEAT, VALVE SPRING	1				
E06-4	044377	RETAINER, EXHAUST VALVE	1				
E06-5	044378	R0TATOR, VALVE	1				
E06-6	044379	GUIDE, SEAL	1				
E06-7	044380	TAPPET, VALVE	2				
E06-8	044381	LIFTER, VALVE	2				
E06-9	044382	PLATE SUBASSEMBLY, LIFTER STOPPER	1				
E06-10	044383	BOLT, VALVE ADJUSTING	2				
E06-11	044384	ROCKER, VALVE	2				
E06-12	044385	NUT, VALVE ADJUSTING	2				
E06-13		NUT, VALVE LOCK	2				
E06-14	044386	SPRING, VALVE	2				

FIG.6 TRAIN,VALVE / CAMSHAFT SUBASSEMBLY （E06）

EXPLODED PARTS LIST

Year: 2018

WP 60 P (VGR 250H-Engine)

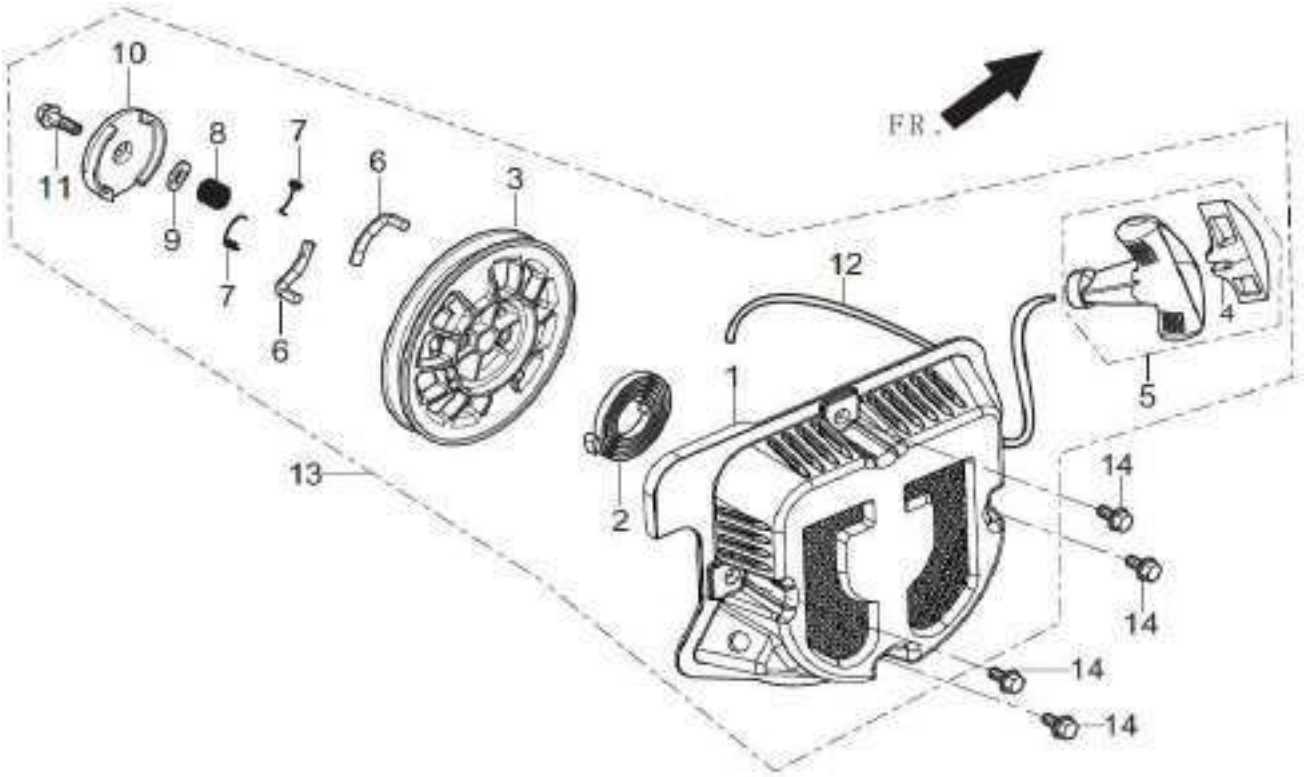

No	Code	Name	Qty	No	Code	Name	Qty
E07-13	044387	STARTER ASSY, RECOIL	1				
E07-14	044486	BOLT	4				

FIG.7 STARTER,RECOIL（E07）

EXPLODED PARTS LIST

Year: 2018

WP 60 P (VGR 250H-Engine)

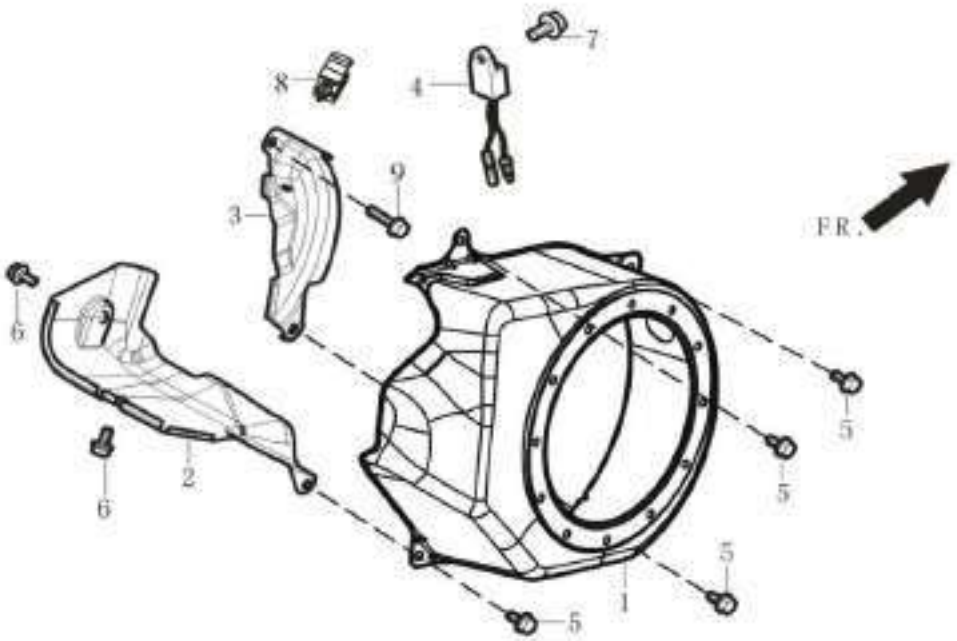

No	Code	Name	Qty	No	Code	Name	Qty
E08-1	044388	SHROUD	1				
E08-2		SHROUD, CYLINDER BODY	1				
E08-3		SHIELD,LOWER	1				
E08-4		PROTECTOR, OIL	1				
E08-5	044486	BOLT	4				
E08-6		BOLT	2				
E08-7		BOLT	1				
E08-8		COLLAR	1				
E08-9		BOLT	1				

FIG.8 SHROUD / SHIELD,LOWER （E08）

EXPLODED PARTS LIST

Year: 2018

WP 60 P (VGR 250H-Engine)

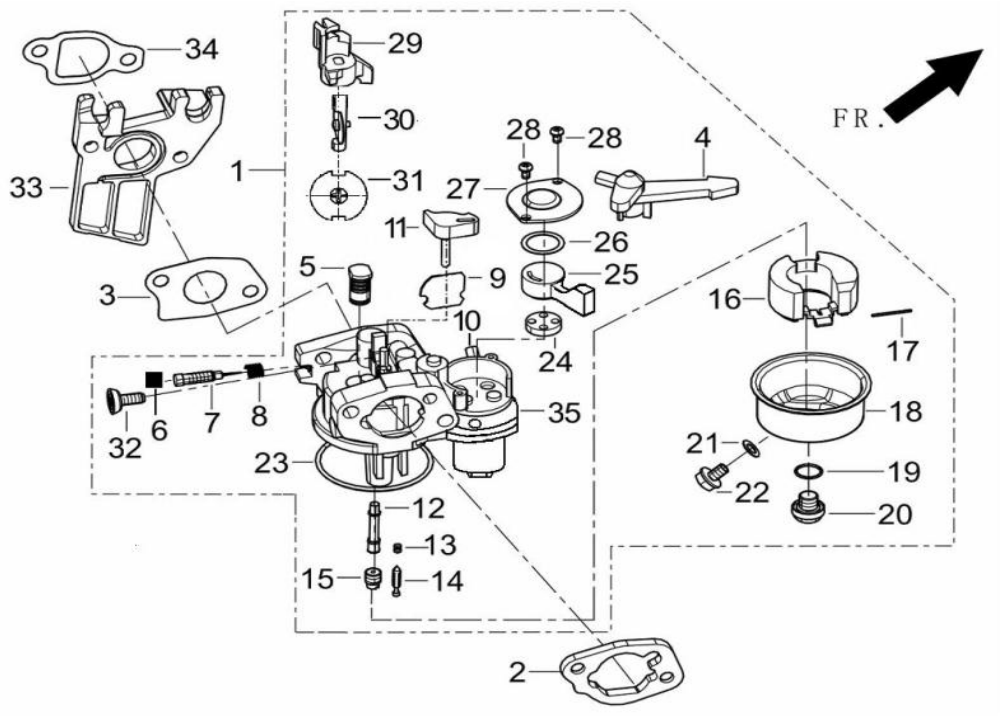

No	Code	Name	Qty	No	Code	Name	Qty
E09-1	044389	CARBURETOR ASSY.	1				
E09-2	044390	GASKET, AIR CLEANER	1				
E09-3	044391	GASKET, CARBURETOR	1				
E09-33	044392	PLATE, CARBURETOR INSULATOR	1				
E09-34	044393	GASKET, CARBURETOR INSULATOR	1				

FIG.9 CARBURETOR ASSY.（E09）

EXPLODED PARTS LIST

Year: 2018

WP 60 P (VGR 250H-Engine)

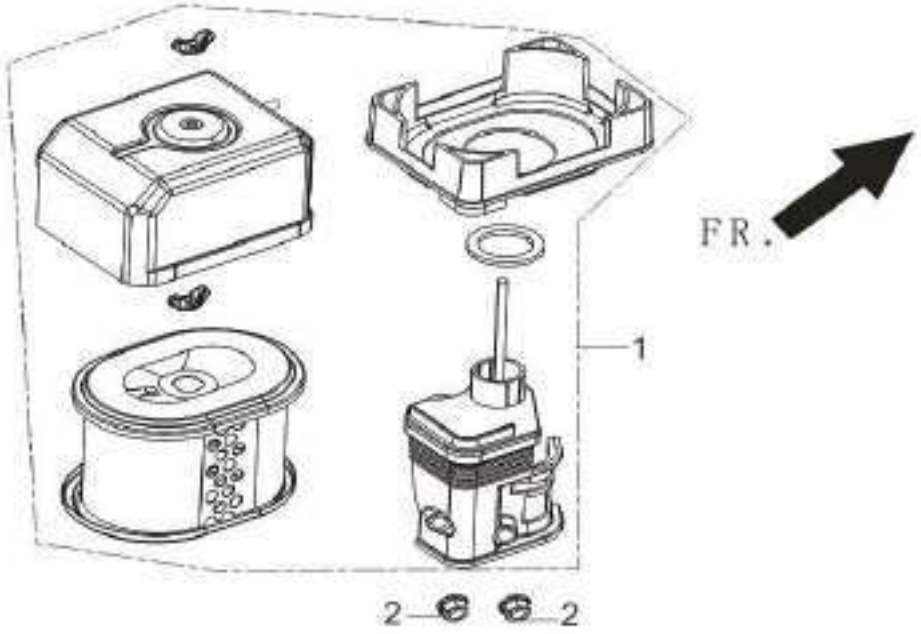

No	Code	Name	Qty	No	Code	Name	Qty
E10-1		CLEANER, AIR	1				
E10-2		NUT	2				

FIG.10 CLEANER, AIR（E10）

EXPLODED PARTS LIST

Year: 2018

WP 60 P (VGR 250H-Engine)

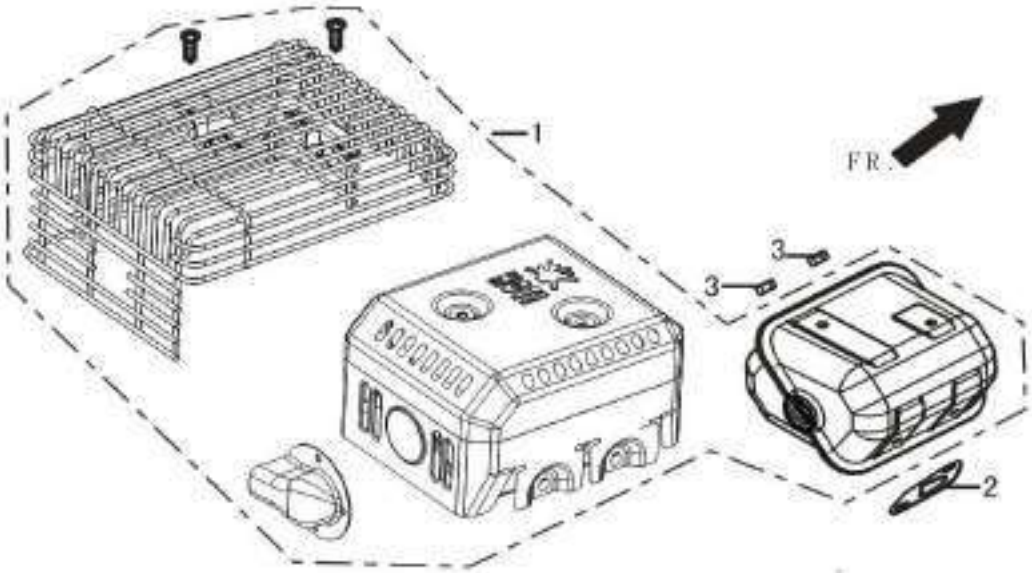

No	Code	Name	Qty	No	Code	Name	Qty
E11-1	044396	MUFFLER ASSY.	1				
E11-2	044395	GASKET, EXHAUST OUTLET	1				
E11-3		NUT	2				

FIG.11 MUFFLER ASSY.（E11）

EXPLODED PARTS LIST

Year: 2018

WP 60 P (VGR 250H-Engine)

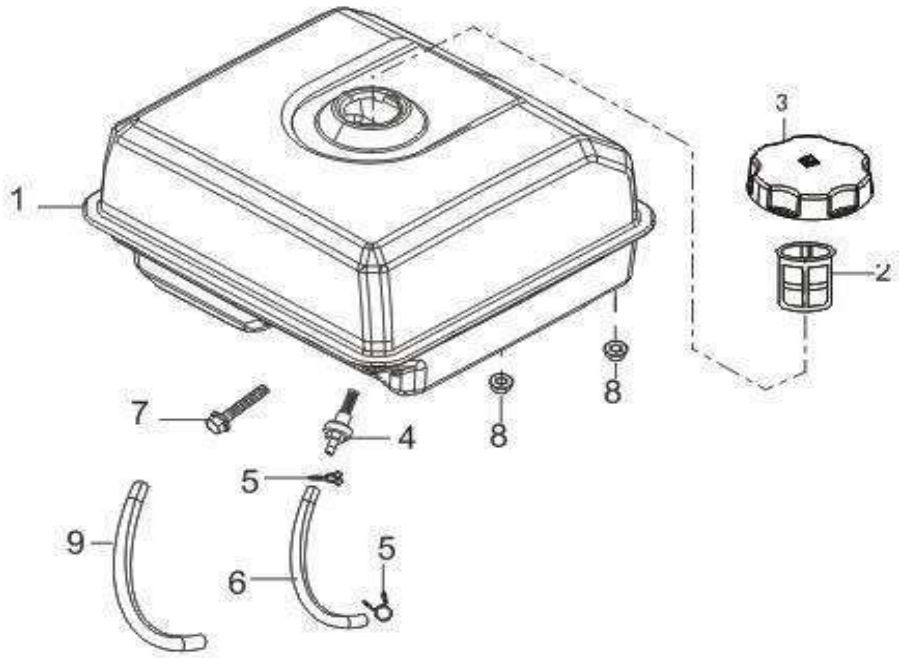

No	Code	Name	Qty	No	Code	Name	Qty
E12-1	044397	TANK, FUEL	1				
E12-2	044398	STRAINER, FUEL	1				
E12-3	044399	COVER, FUEL TANK	1				
E12-4	044400	OUTLET SUBASSEMBLY, FUEL TANK OIL	1				
E12-5		COLLAR	2				
E12-6		TUBE, FUEL	1				
E12-7		BOLT	1				
E12-8		NUT	2				
E12-9		JACKET, RUBBER	1				

FIG.12 TANK ASSY, FUEL（E12）

EXPLODED PARTS LIST

Year: 2018

WP 60 P (VGR 250H-Engine)

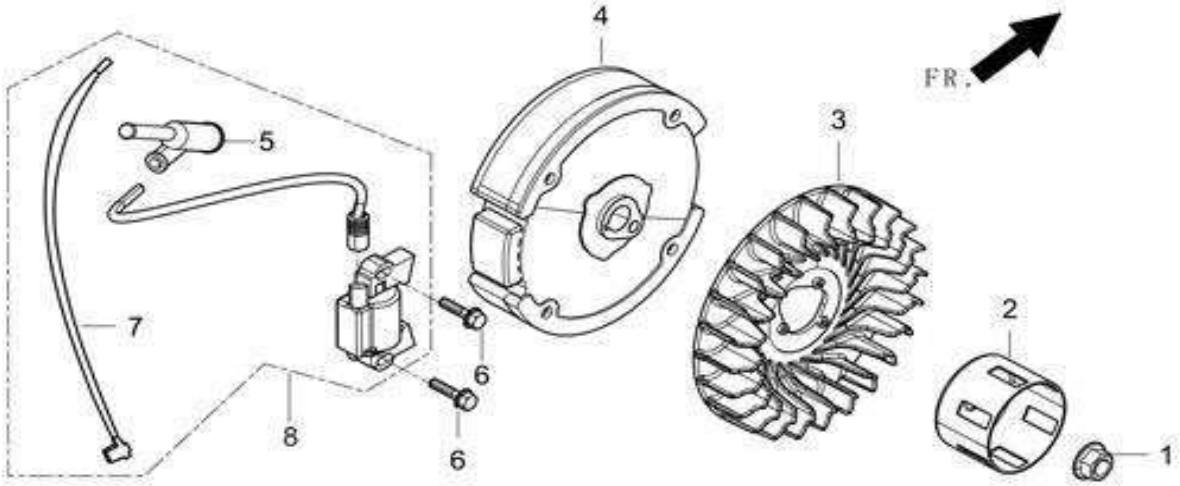

No	Code	Name	Qty	No	Code	Name	Qty
E13-1	044401	NUT	1				
E13-2	044402	PULLEY,STARTER	1				
E13-3	044403	IMPELLER	1				
E13-4	044404	FLYWHEEL SUBASSEMBLY	1				
E13-6		BOLT	2				
E13-8	044405	COIL, IGNITION	1				

FIG.13 FLYWHEEL/IMPELLER /STARTER PULLEY /IGNITION COIL （E13）

EXPLODED PARTS LIST

Year: 2018

WP 60 P (VGR 250H-Engine)

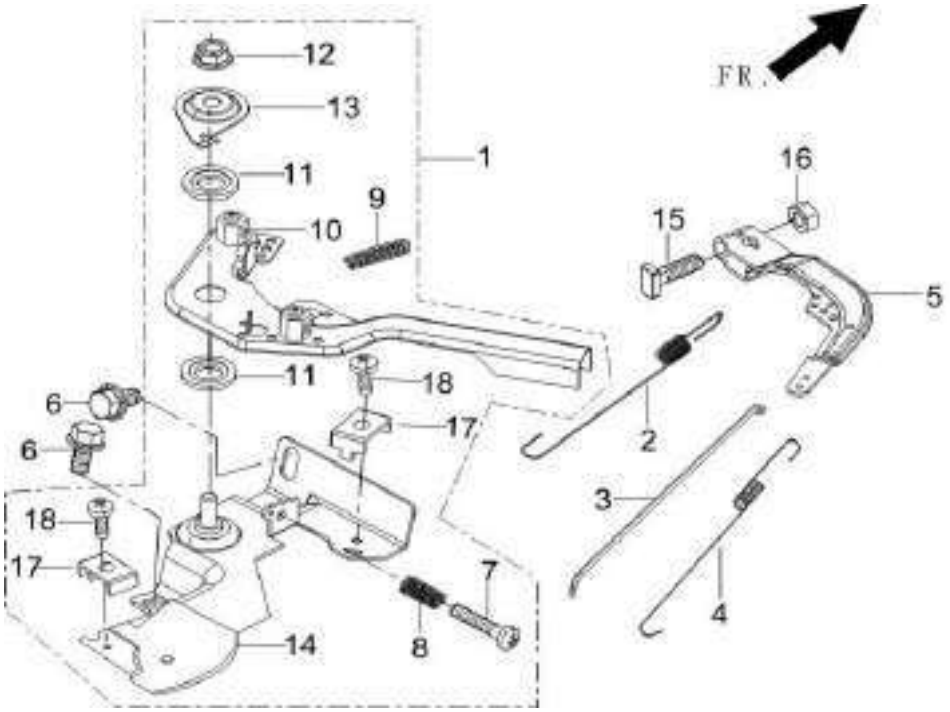

No	Code	Name	Qty	No	Code	Name	Qty
E14-1	044406	CONTROL ASSY, THROTTLE	1				
E14-2	044407	SPRING, GOVERNOR	1				
E14-3		ROD, GOVERNEOR	1				
E14-4	044408	SPRING, THROTTLE VALVE RETURNING	1				
E14-5		SUPPORT SUBASSEMBLY, GOVERNOR	1				
E14-6		BOLT	2				
E14-15		BOLT, GOVERNOR SUPPORT	1				
E14-16		NUT	1				

FIG.14 CONTROL ASSY, THROTTLE （E14）

EXPLODED PARTS LIST

Year: 2018.

WP 60 P

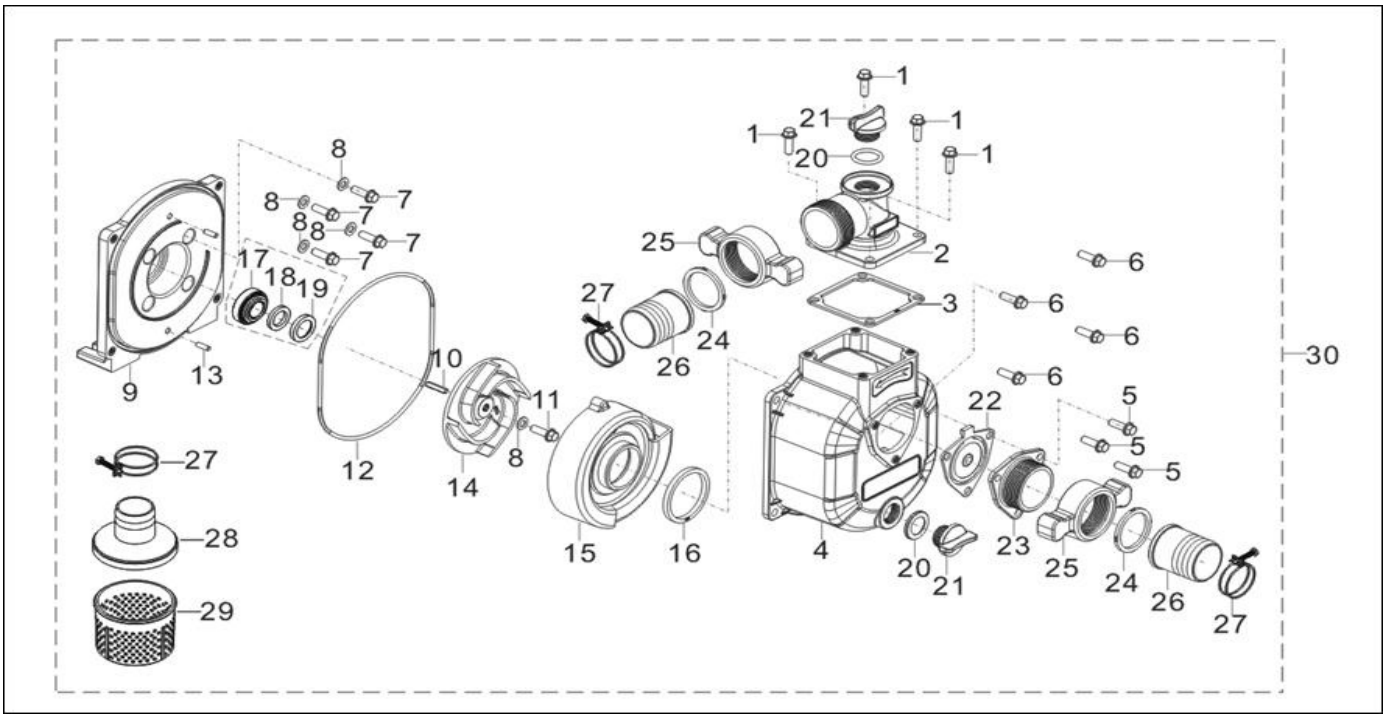

No	Code	Name	Qty	No	Code	Name	Qty
E15-1	052576	BOLT	4	E15-25		JOINT, HOSE	2
E15-2		OUTLET, WATER	1	E15-26		INTERFACE, HOSE	2
E15-3	052578	GASKET, OUTLET	1	E15-27		HOOP ASSY, HOSE	3
E15-4		PUMP BODY	1	E15-28	052596	COVER, FILTER	1
E15-5		BOLT	3	E15-29	052597	FILTER	1
E15-6		BOLT	4	E15-30		PUMP ASSY, WATER	1
E15-7		BOLT	4				
E15-8	052580	WASHER	5				
E15-9	052581	JOINT, WATER PUMP	1				
E15-10	052582	KEY	1				
E15-11	053718	BOLT	1				
E15-12	053714	CUSHION, WATER PUMP JOINT	1				
E15-13		PIN	2				
E15-14	052585	IMPELLER, WATER PUMP	1				
E15-15	052586	CASE, WHORL	1				
E15-16	052587	RIGN, WHORL CASE SEALING	1				
E15-17	044513	SEAL ASSY, MECHANISM	1				
E15-18		SEAL,PORCELAIN	1				
E15-19		WASHER	1				
E15-20	053715	WASHER, SCREW PLUG	2				
E15-21	053711	PLUG, THREAD	2				
E15-22	052591	GASKET, INLET WATER	1				
E15-23	052592	INLET, WATER	1				
E15-24	053716	RING, HOSE JOINT SEAL	2				

Pump (E15)

EXPLODED PARTS LIST

Year: 2018.

WP 60 P

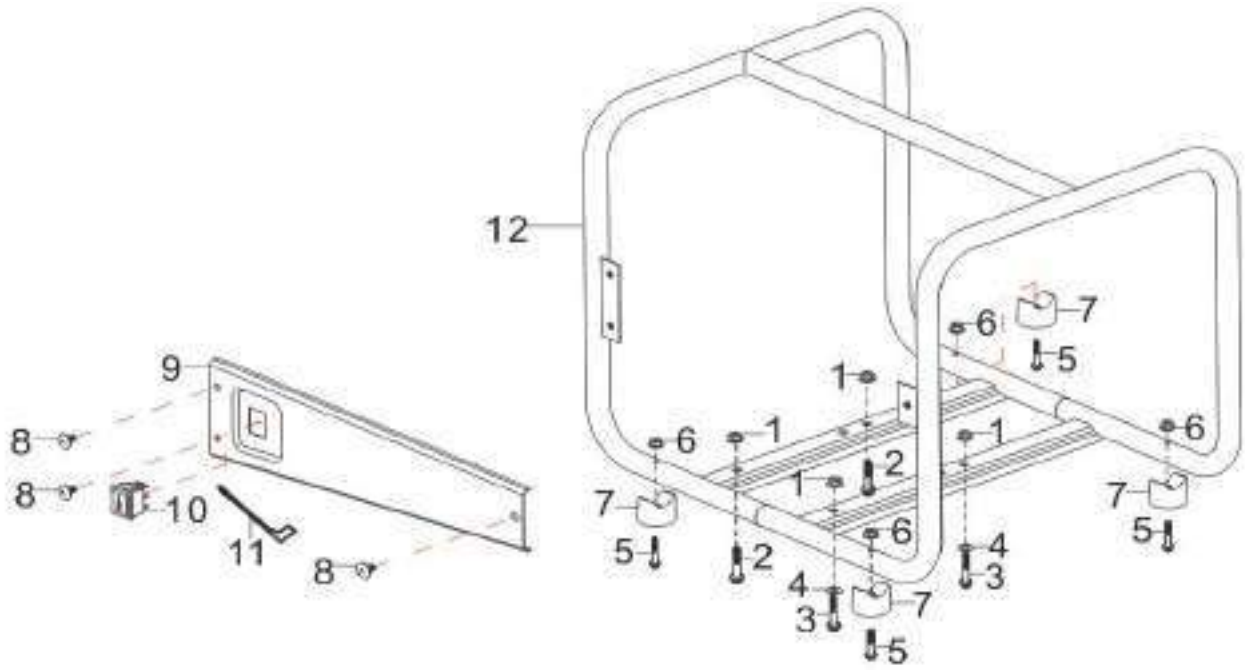

No	Code	Name	Qty	No	Code	Name	Qty
E16-1		NUT	4				
E16-2		BOLT	2				
E16-3		BOLT	2				
E16-4		WASHER	2				
E16-5		BOLT	4				
E16-6		NUT	4				
E16-7	052599	SEAT, ENGINE FRAME SHOCK ABSORPTION	4				
E16-8		BOLT	3				
E16-9	052600	DECORATIVE FRAME	1				
E16-10	053707	SWITCH SUBASSEMBLY	1				
E16-11		WIRE, STOP ENGINE	1				
E16-12	052602	FRAME ASSY, ENGINE	1				

Frame assy, engine (E16)